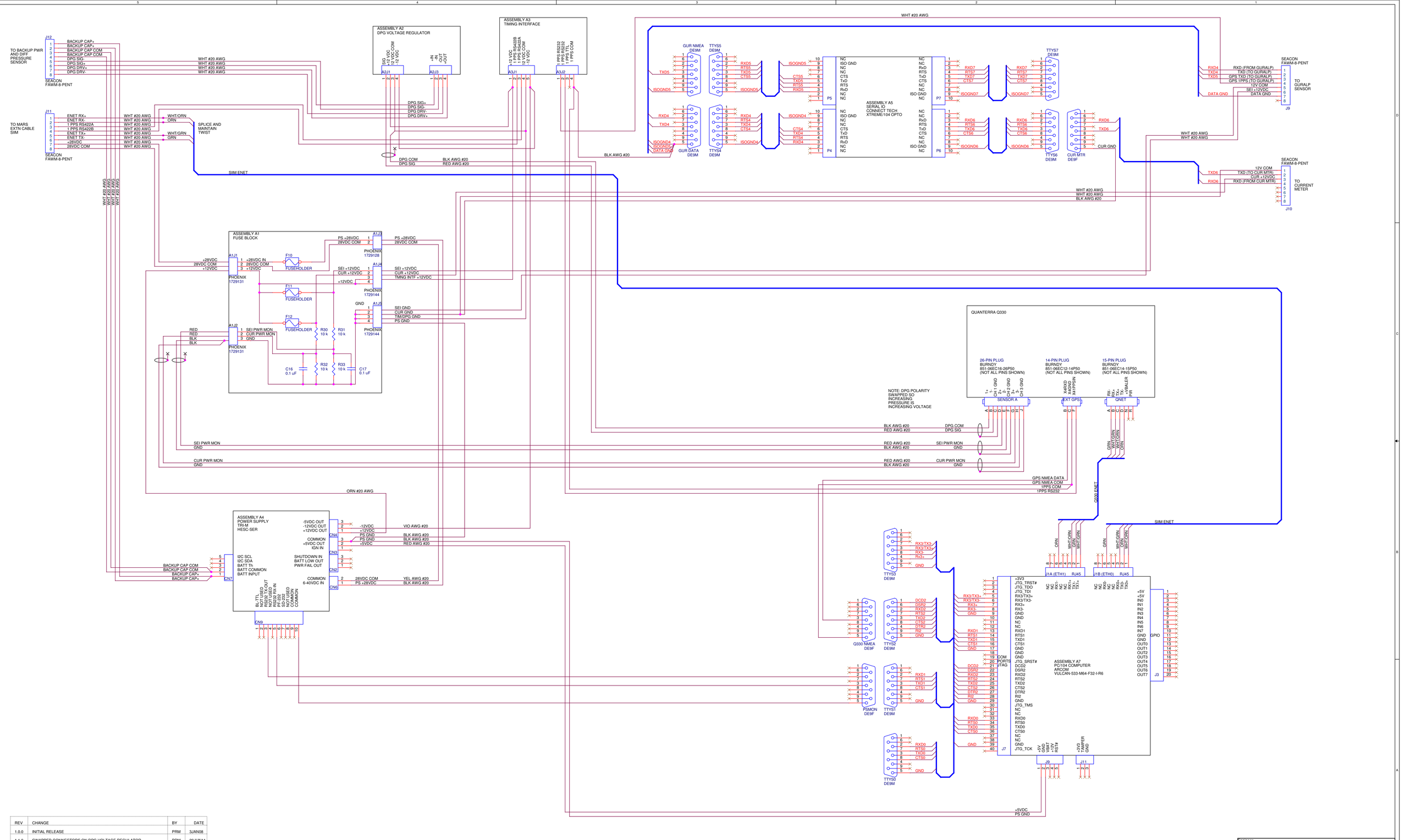

REV	CHANGE	BY	DATE
1.0.0	INITIAL RELEASE	PRM	3JAN08
1.1.0	SWAPPED CONNECTORS ON DPG VOLTAGE REGULATOR	PRM	20JUN11
1.2.0	ADDED SIGNAL NAMES TO UNLABELED WIRES	PRM	16APR12

Engineer	P McGill		
Title	MOBB on MARS: Data Logger Sphere		
Size D	Document Number 100020455		Rev 1.2.0
Date: Monday, April 16, 2012		Sheet 2 of 7	